E-Tech

EV 20 - 50 Hz

TECHNICAL DATA

Pump Model	MOTOR		Dimensions [mm]												Weight [kg]		
			L1	L2		L3	L4	L5	M		D1		D2	L1+L2	Pump	Motor	Electric Pump
	[kW]	Dim	F	1-PHASE	3-PHASE	T	V	C	1-PHASE	3-PHASE	1-PHASE	3-PHASE					
EV 20/1	1.1	80	396	232	232	396	396	396	150	129	160	160	170	628	19	11.1	30.1
EV 20/2	2.2	90	396	267	267	396	396	396	160	138	180	180	170	663	20	16	36
EV 20/3	3	100	444	-	306	444	444	444	-	145	-	196	170	750	21.5	22.8	44.3
EV 20/4	4	112	492	-	306	492	492	492	-	145	-	196	170	798	22.5	26.5	49
EV 20/5	5.5	132	752	-	328	752	752	752	-	160	-	225	300	1080	44	33.6	77.6
EV 20/6	7.5	132	800	-	350	800	800	800	-	160	-	225	300	1150	45.5	36	81.5
EV 20/7	7.5	132	848	-	350	848	848	848	-	160	-	225	300	1198	46.5	36	82.5
EV 20/8	11	160	916	-	425	916	916	916	-	194	-	248	350	1341	51.5	59	110.5
EV 20/9	11	160	964	-	425	964	964	964	-	194	-	248	350	1389	53	59	112
EV 20/10	11	160	1012	-	425	1012	1012	1012	-	194	-	248	350	1437	54.5	59	113.5
EV 20/11	15	160	1060	-	476	-	1060	1060	-	194	-	248	350	1536	55.5	68	123.5
EV 20/12	15	160	1108	-	476	-	1108	1108	-	194	-	248	350	1584	57	68	125
EV 20/13	15	160	1156	-	476	-	1156	1156	-	194	-	248	350	1632	58.5	68	126.5
EV 20/14	15	160	1204	-	476	-	1204	1204	-	194	-	248	350	1680	60	68	128
EV 20/15	18.5	160	1252	-	542	-	1252	1252	-	238	-	317	350	1794	61.5	104	165.5
EV 20/16	18.5	160	1300	-	542	-	1300	1300	-	238	-	317	350	1842	62.5	104	166.5
EV 20/17	18.5	160	1348	-	542	-	1348	1348	-	238	-	317	350	1890	64	104	168

DIMENSIONAL DRAWINGS

F Version

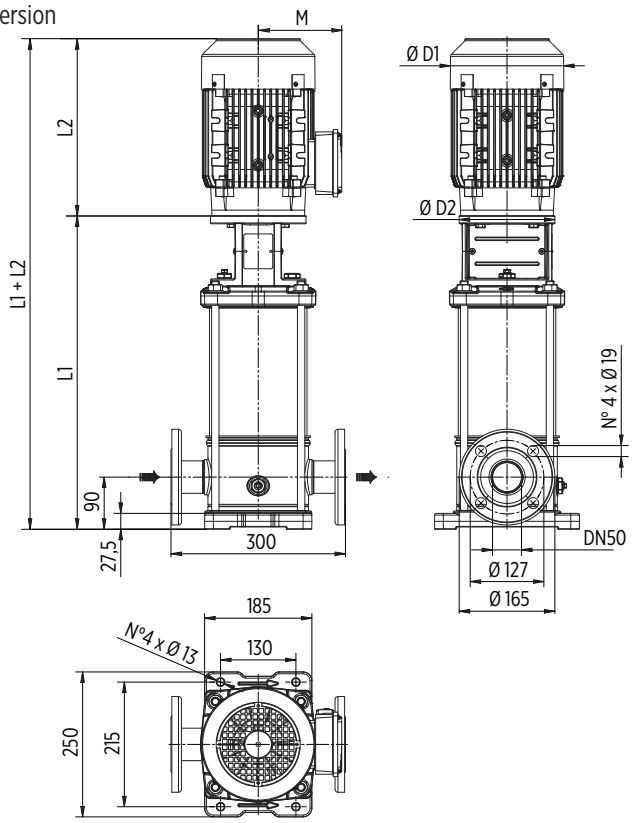

Round flanges on body type PN25/40: the pump is supplied without counterflanges (Optional accessories, including bolts and joints)

T Version

Available from EV20/1 to EV20/10

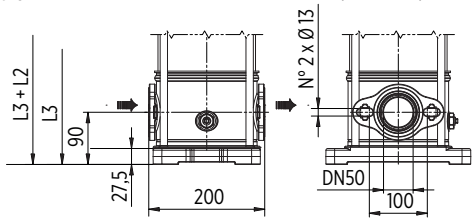

Oval flanges on body type PN16: the pump is supplied without threaded oval counter flanges (Optional accessories, including bolts and joints)

V Version

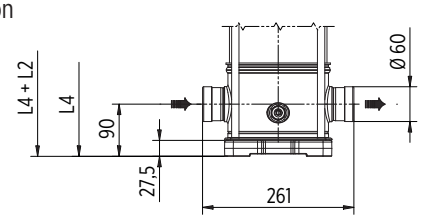

Connections with rapid fittings type "Victaulic": the pump is supplied without the collars (Optional accessories)

C Version

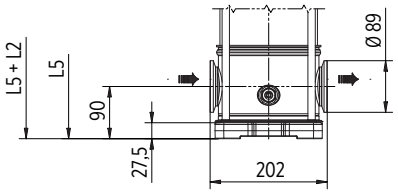

Connections with round fittings type Clamp-FlexiClamp: the pump is supplied without collars (Optional accessories)

0015102 03/2021